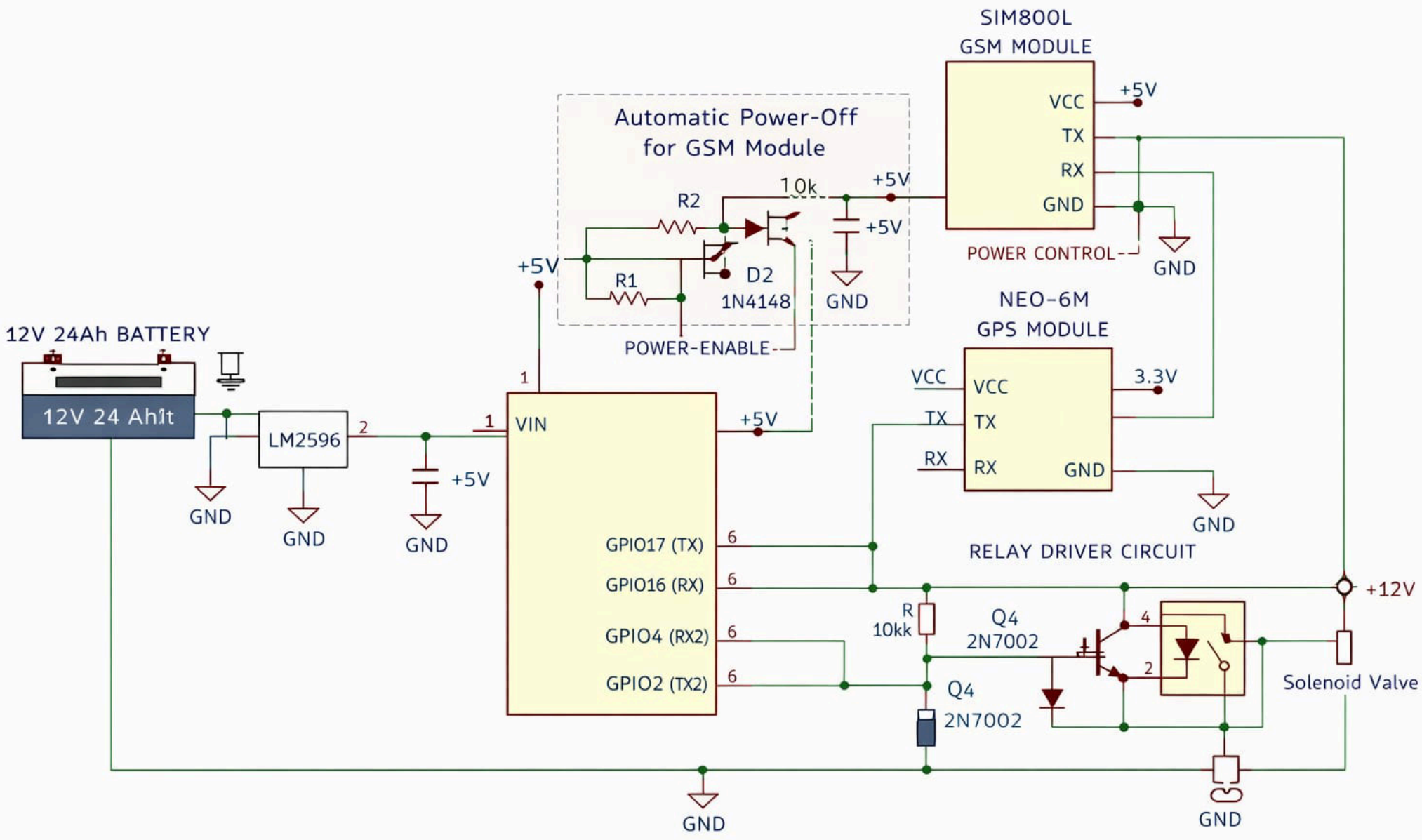

Ultra-Low Power Smart Irrigation System (Long Battery Life)